INSTRUCTION MANUAL

---------- *Duo-battery charging solar controller,*

For RVs, Caravans, and boats



RATINGS (12/24VDC Auto)

EPIPDB-COM, 10A, 12/24VDC Auto

EPIPDB-COM, 20A, 12/24VDC Auto

NOTES: For use with solar panels only

TECHNICAL INFORMATION

Setpoint	Sealed battery	Gel battery	Flooded battery
Equalize charging voltage	14.6V	—	14.8V
Boost charging voltage	14.4V	14.2V	14.6V
Float charging voltage	13.8V	13.8V	13.8V
Maximum solar voltage	30V（12V System） 55V（24V System）		
Battery voltage range	8～15V		
Boost time	120 minutes		
Self-consumption	4mA at night, 10mA at charging		
Meterbus connection	8- PIN RJ-45		
Temp. compensation	-5mV/℃/2V		
Terminals	$4mm^2$		
Temperature	-35℃ ～ +55℃		
Net weight	250g		

Note: all the data is for 12V, for 24V, please use 2x.

Major feature of duo-battery controller

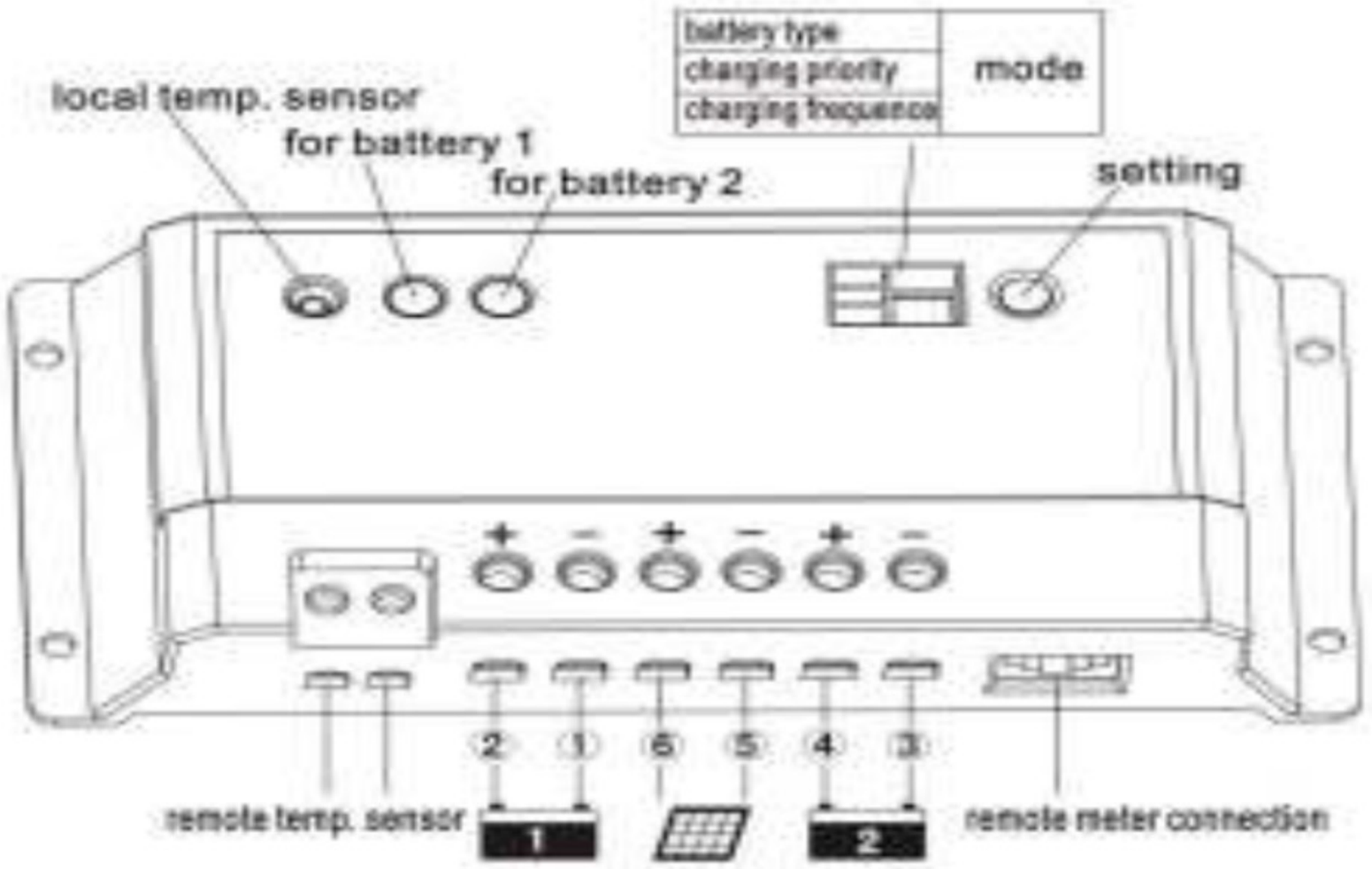

(Note: connect the components as the 1-6)



Connect with the battery #1



Connect with the battery #2

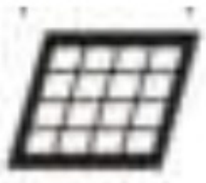

Connect with the PV.

Remote temp. sensor

A connection point for RTS(option) to remotely monitor battery temperature

Local temp. sensor

Measures ambient temperature. Battery regulation is adjusted accordingly

For battery 1

Provides charging & battery status and errors

For battery 2

Provides charging & battery status and errors

Remote meter connection

A communication port for the remote meter

Note: where is no RTS, the controller calculate the data which got from the local temp. sensor. The controller will come to RTS automatically when the RTS was connected.

SETTING MODE

battery type	mode
charging priority	
charging frequence	

Three leds flashing, each LED express different specifications, choose the

LED first according to the following information, and then press the switch for 5 seconds until the number flashing, choose one number as you need, and leave it and the number you set will be saved.

1. 1st led is the battery type setting.

Number shows	Battery type
1	Sealed battery
2	Gel battery
3	Flooded battery

2. 2nd led is for charging priority, only set the percentage you want for battery #1, the controller will automatically calculate the rest for battery #2.

Number shows	Battery #1 charging	Battery # 2 charging
0	0%	100%
1	10%	90%
2	20%	80%
3	30%	70%
4	40%	60%
5	50%	50%
6	60%	40%
7	70%	30%
8	80%	20%
9	90%(pre-set)	10%

Note: in the normal charging status, the controller will divide the charging as the setting. While battery #1 is fully charged, more charge current will be diverted to battery #2, and return to the setting charging automatically when the battery #1 is in low voltage.

When the controller detects there is only battery #1, all the charging will go to the battery #1 automatically.

3. 3rd led is for charging frequency.

Number shows	PWM Charging frequency
0	25Hz(pre-set)
1	50Hz
2	100Hz

TROUBLESHOOTING

1. LED blinking, short circuit, check the PV and battery, and make sure that they are in correct connection
2. LED slowly flashing, fully charged
3. LED ON, on charging
4. LED frequent flashing, with battery, no charging
5. LED OFF, no battery or over voltage

MECHANICAL DRAWING

