FALCON™
WORLD CLASS TECHNOLOGY

Pure Sine Wave Inverter

Owner's Manual

600W and 1500W



Ask Grandad

It's all a learning experience



Ask Grandad on 01928 759239

or visit www.falcontechnology.co.uk/askgrandad

Thank you for purchasing the Falcon Pure Sine Wave Inverter. Please read these instructions carefully before use.

1. INTRODUCTION

1.1 What is an Inverter?

A power inverter is an electronic device that converts 12V DC (Direct Current) battery power to standard AC (Alternating Current) mains power. DC is the power that is stored by a battery while AC is the standard power needed to run ordinary household electrical equipment. A Power Inverter allows you to use household electrical items in places and situations where AC mains power is not available.

1.2 Pure Sine Wave Inverter

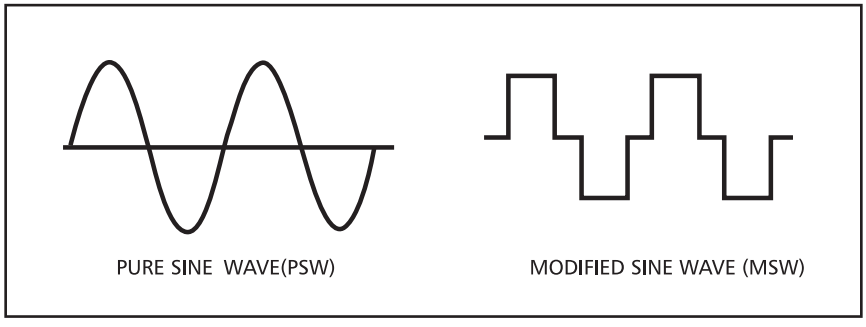

If you want to run your equipment exactly to the manufacturer's specifications, choose a pure sine wave inverter. With pure sine wave, motors start easier and run cooler and some equipment may only operate properly with a pure sine wave inverter, such as laser printers, variable speed motors and digital clocks/devices.

2. MAIN COMPONENTS

2.1 Front Panel

The front panel view shows the inverter's ON/OFF Switch, AC Output Sockets, LED Indicator Light, Vent Outlet, Remote Control port, Chassis Ground and USB socket.

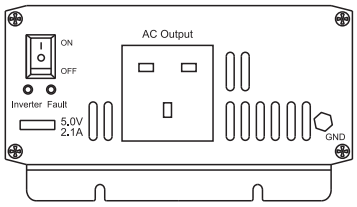

600W

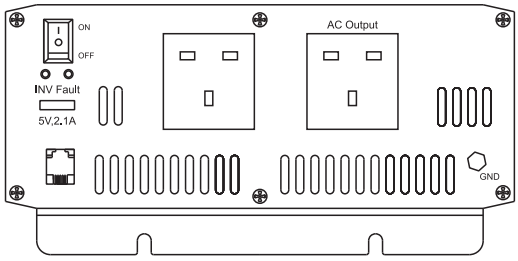

1500W

A. ON/OFF Switch.
This switch controls ON/OFF operation of the inverter.
NOTE: If using the wired remote control this switch should be left in the OFF position.

B. LED Indicator Light:
a) Fault: Turns Red to show a fault, refer to the Troubleshooting section for more information.

b) Inverter: This light will illuminate Green whenever AC power available at the outlet.

C. AC Mains Output Socket:

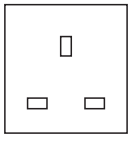

This is a standard 3 pin UK mains socket.

D. Vent Outlet.
Allows hot air pushed from the rear cooling fan to exit. Therefore it MUST be kept clear whenever the power inverter is to be used.

E. Chassis Ground
Properly grounds the Inverter to vehicle grounding system or to earth ground.

F. Remote Switch Port (1500W Model):
Use to connect the remote ON/OFF switch via a communication cable.

G. USB Port:
USB Port provides power to operate and charge USB-enabled devices. Max output is 2.1A.

2.2 Rear Panel

The rear panel view shows the inverter's Cooling fan, DC Battery Terminals, Fuses, Chassis Ground.

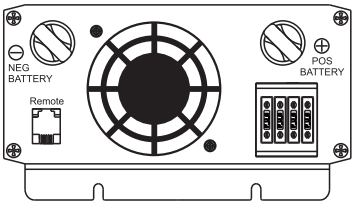

600W

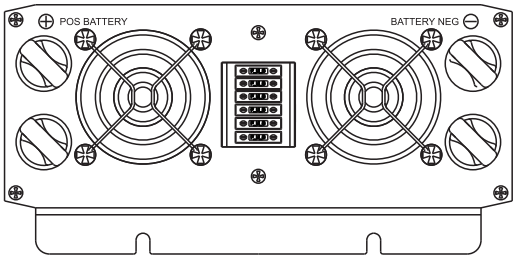

1500W

A. Temperature and Load controlled Cooling Fan
a) If the temperature is over 45°C the fan will switch on.
b) If the load is over 30-40% the fan will switch on.

B. DC Battery Terminals
For connection of the inverter to the battery.
Negative (-) and Positive (+) DC terminals should be kept insulated to protect from accidental short circuits.

On the 1500W model both red terminals and both black terminals should be connected to the battery in parallel.

a) Connect the red cable to the red post marked (+) on the back of the inverter. Connect the other end to the positive terminal on the battery.

If you connect the cables to the incorrect terminals, you will reverse the polarity and damage the inverter.

b) Connect the black cable to the black post marked (-) on the back of the inverter. Connect the other end to the negative terminal on the battery.

If you connect the cables to the incorrect terminals, you will reverse the polarity and damage the inverter.

WARNING: DO NOT REVERSE POLARITY!
DAMAGE CAUSED BY REVERSE POLARITY WILL NOT BE COVERED BY WARRANTY.

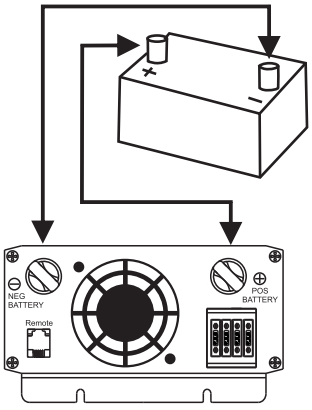

600W

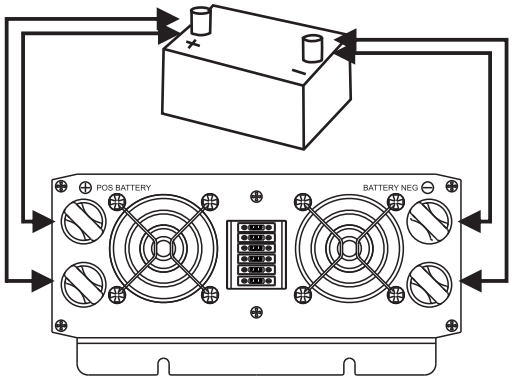

1500W
Connect both sets of positive and negative terminals

C. Fuse
Fuses for DC Input are fitted to the rear panel so as to be easily accessible in order to facilitate checking & replacing if required. Depending on the installation this maybe possible without removing the inverter.

D. Remote Switch Port (600W Model):
Use to connect the remote ON/OFF switch via a communication cable.

2.3 Wired Remote Control

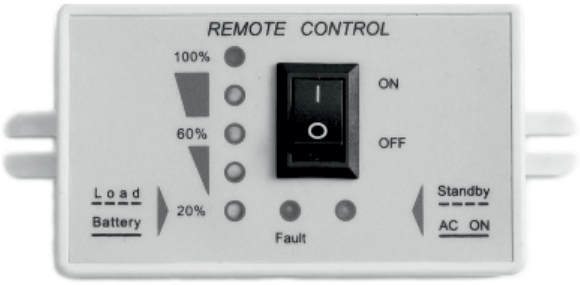

Power ON/OFF Switch
The power ON/OFF switch is to turn the inverter on or off.

Battery Capacity/Load Voltage indicator
The LED indicator alternates between showing load and battery every 8 seconds.

Load: Slow flash, once per second. Shows the approximate connected equipment load level in five levels: 20%,40%,60%,80%,100%.

Battery: Solid green. Shows the approximate battery residual capacity in five Levels: 20%,40%,60%,80%,100%.

Standby/AC ON Indicator
Solid green indicates the inverter's output is on, a slow flash indicates the load power is less than 5% of rated power or the inverter is in standby.

Fault Indicator
Turns red to show a fault, refer to Troubleshooting section for more information.

Connecting the Communications Cable
The communications cable is 3 meters, 6-conductor cable (wired like a normal telephone-type cable). This cable is connected to the RJ11 jack on the rear of the remote control and to the REMOTE port located on the rear of the inverter.

Important Note:
The Inverter's ON/OFF Switch and Remote control's ON/OFF Switch are in parallel.
To use the remote control to turn the Inverter OFF, You must have the inverter's ON/OFF Switch set to OFF

3. HOW TO USE THE INVERTER

3.1 Load consideration

When an appliance with a motor starts, it requires a momentary surge of power. This surge of power is the “starting load” or “peak load”. Once started, the appliance requires less power to continue to operate. This is known as the “continuous load”. It is important to know the starting loads and the continuous loads of the appliances that are to be powered by the inverter.

Appliance power is rated in watts. This information is usually stamped or printed on most appliances and equipment. In some cases, a tool will be rated in amperes. To convert from amps to watts, multiply:

Amps x AC voltage = Watts (Eg: 2.0 A x 230 V = 460 Watts)

This formula yields an approximation of the continuous wattage load of that appliance.
The startup load of an appliance is a major factor of whether this inverter can power it.
Startup load is momentary. With many appliances, it is approximately twice the continuous load, but some appliance startup loads can be as high as eight times the continuous load.
If you are unsure of your equipments Power requirements an 'Energy use' meter may be used to measure the starting peak & continuous wattage .

In order to reduce the possibility of damaging the inverter or the equipment this inverter will automatically shut down in the event of an output overload.
When this occurs a Red LED indicator will turn on and the Buzzer signals a fault.

3.2 Calculating running time/ battery capacity

To determine the approximate minimum battery amp-hour rating that you will need to operate appliances from the inverter and any DC appliances powered by the battery, follow these steps:

1. List the maximum continuous wattage that the inverter has to supply.
2. Estimate the number of hours the appliances will be in use between battery recharges.

This will vary depending on appliances. For example, a typical home-use coffee maker draws 500 watts during its brew time of 5 minutes. It maintains the temperature of the pot, requiring 100 watts. Typical use of a microwave oven is only for a few minutes. Some longer operating time appliances are lamps, TVs, computers and refrigerator/freezers.

Determine the total watt-hours of energy needed. This is done by multiplying average power consumption in watts by hours of run time. For example: 500 watts for 10 hours = 5000 watt hours. To get an estimate of the maximum current (in amps) that a battery bank must be capable of delivering to the inverter, divide the load watts by ten. For example a 500 watt appliance load will need 50 amps at 12 volts DC. Using the 500 watts (or 50 amps) for 10 hours example as above, then 50 amps is needed for 10 hours. This provides us with the basic amp-hours (AH) of battery that is required. Ten hours at 50 amps equals 500 amp-hours (AH). There are additional factors that determine actual run time. These include:

- AC appliance load and time in use (basic AH).
- Cable gauge and length (cable losses).
- Charge level of the batteries (between use, chargers have to be able to fully charge the batteries).
- Temperature of the batteries (colder batteries provide fewer amps).
- Age and condition of the batteries (older batteries lose AH capacity).
- Compliance with turning off unnecessary AC loads.
- Use of DC appliances and compliance with turning off unnecessary DC loads.

3.3 Placement of the inverter
The location where the inverter is installed must be:

A. DRY: Do not allow water to drip or splash onto it.

B. COOL: Ambient air temperature should be between 0º C and 40º C - ideally between 15º and 25º C. Do not place the inverter on or near a heating vent or any piece of equipment which is generating heat above room temperature. Do not place the inverter in direct sunlight unnecessarily.

C. VENTILATED: Allow at least one inch of clearance around the unit for air flow. Do not place items on or over the inverter during operation. Make sure that air is allowed to circulate freely around the unit. A fan is helpful in the case where the inverter is operating at maximum

D. DUST FREE: Do not install the inverter in a dusty environments. The dust can be drawn into the unit when the cooling fan is working.

F. CLOSE TO BATTERIES: Avoid excessive cable lengths.

3.4 Mounting position of the inverter
The inverter may be mounted on a horizontal or vertical service. Away from heat sensitive materials & flammable items.

3.5 Connections
Follow the connection sequence described below.

Step 1: Ensure that the ON/OFF switch on the Inverter is in the OFF position.

Step 2: Connect inverter to the power source.
Connect the DC cables to the DC battery terminals on the rear panel of the inverter. The red terminal is positive (+) and the black terminal is negative (-).

Step 3: Connect the inverter to appliances.

Make sure the load power within the rated power of inverter and the start power should not exceed the peak power of the inverter.

Step 4: Turn on the inverter 1st, then turn on the appliance you want to run.

If you are operating several loads from the power inverter, turn them on separately after the inverter has been turned on. This will ensure that the power inverter does not have to deliver the starting currents for all the loads at once.

4. Important safety instructions

Incorrect installation and misuse of the inverter may result in danger to the user or hazardous conditions.

- Do not attempt to connect the output to any other power source, including any AC mains.
- Make sure the opening to the ventilation fan and vent holes are not blocked.
- Avoid pulling on the cords and cables. Always grip plugs firmly when unplugging from power source and when disconnecting cables.
- For indoor use only. Avoid exposure to external heat sources including direct/prolonged sunlight, dust, corrosive chemicals and moisture.
- It is normal for inverters to become warm during use. Avoid touching the device during use or positioning near heat-sensitive materials.
- Do not drop or subject the inverter to undue shock.
- Do not place anything on top of the inverter.
- The use of improper cables, connectors, or accessories not supplied with this product constitutes misuse and may result in injury or damage.
- Do not attempt to service or dissemble. The unit is not user-serviceable. Attempting to disassemble or service the unit can result in electrical hazard, including death from High-Voltage electric shock! If you experience problems with the unit, discontinue use and contact a competent Technician or the original place of purchase.

- When cleaning the inverter, please switch off power & unplug the inverter. Carefully clean with a dry cloth. Do not use wet cloth or cleanser.
- Disconnect all AC and DC connections before working on any circuits associated with the inverter. Turning the ON/OFF switch on the inverter to off position may not entirely remove dangerous voltage.
- Keep the Inverter, batteries & all cabling away from children.

5. Protection features

This Inverter is equipped with numerous protection features to ensure safe operation.

Input Low Voltage Protection:

A: When battery voltage is below 10.5V±0.2V the **Buzzer will sound 2 times and RED LED will blink 2 times every eight seconds**, which indicates DC power supply voltage is descending and batteries need to recharge.

B: When input voltage is below 10V±0.2V the **Buzzer will sound 3 times and RED LED will blink 3 times every eight seconds** ; AC output will be automatically shut off.

Input Over Voltage Protection

When input voltage reach 15.5V±0.2V the **Buzzer will sound 4 times and RED LED will blink 4 times every eight seconds**; the AC output will be shut off automatically.

Short Circuit Protection

If a short circuit occurs the **RED LED constantly flashes** and the AC output will be shut off.

Overload Protection

When overloads occur, the **RED LED constantly flashes** and the AC output will be shut off.

Reverse polarity protection
Via Fuse: When battery terminals are reverse connected, the fuse(s) will be blown to protect appliances. Note: Reverse polarity may cause permanent damage.

Over Temperature Protection
When the internal heat sink temperature exceeds 45ºC the cooling fan will automatically turn on to cool the inverter; when the temperature drops to less than 30ºC the cooling fan will automatically shut off.

If the inner temperature exceeds 75ºC, The **Buzzer will sound 5 times and RED LED will blink 5 times every eight seconds**; AC output will automatically shut off.

6. Troubleshooting

.

TV Interference
In rare cases you can sometimes get interference on TV & Radio receivers. This may be improved through use of a filter(s) but most problems occur because of a Weak Signal to the TV or radio.

On some occasions when there is interference on every station, you can try the following:

- Place the inverter further away from the TV and TV antenna and cable.
- Make sure the Inverter Casing is grounded to the Vehicle Ground (Chassis)
- Try to change the direction of TV signals cable and TV antenna to reduce the interference to minimum.
- Use screened antenna cable of higher quality.

SYMPTOM	POSSIBLE CAUSE	SOLUTIONS
ON/OFF switch is switched on, LED does not light. Buzzer is off. There is no AC voltage	There is no voltage at the DC input Terminals	1. Check the continuity of the battery input circuit 2. Check that the battery fuse is intact. Replace if blown 3. Check that all connections in the battery input circuit are tight
	Polarity of the input voltage has been reversed and that has blown the DC side fuses. (Note: Reverse polarity may cause permanent damage)	Correct the polarity of the input connections and replace the fuse. If the unit does not work after replacing the fuse, the unit has been permanently damaged. Contact Technical Support
Buzzer alarm is sounded 1 time. There is no AC voltage.	1. Loose AC output connections. 2. Short circuit of AC Output wiring.	1.Tighten AC output connections 2.Check AC wiring for short circuit.
Buzzer sounds 2 times and Red LED blinks 2 times every eight seconds	Voltage at the DC input terminals reads below 10.5±0.2VDC	1.Check that the battery is fully charged. Recharge if low. 2. Check that the battery cables are thick enough to carry the required current over the required length. Use thicker cables if required. 3. Tighten connections of the battery input circuit
Buzzer sounds 3 times and Red LED blinks 3 times every eight seconds	Voltage at the DC input terminals reads below 10±0.2VDC	1.Check that the battery is fully charged. Recharge, if low 2. Check that the battery cables are thick enough to carry the required current over the required length. Use thicker cables, if required 3. Tighten connections of the battery input circuit.
Buzzer sounds 4 times and Red LED blinks 4 times every eight seconds	Higher input DC voltage than 15.5±0.2VDC	1. Check that the voltage at the DC input terminals is no more than 15V DC. 2. Ensure that the maximum charging voltage of the battery charger /alternator / solar charge controller is below 15V DC 3. Ensure that an un-regulated solar panel or wind turbine is not used to charge a battery

SYMPTOM	POSSIBLE CAUSE	SOLUTIONS
Buzzer sounds 5 times and Red LED blinks 5 times every eight seconds	System overheating	1. Check that the fan is working. If not, the fan / fan control circuit may be defective Call Technical Support 2. If the fan is working, check that the ventilation slots on the suction side and the openings on the discharge side of the fan are not obstructed 3. If the fan is working and the openings are not obstructed, check that enough cool replacement air is available. Also check that the ambient air temperature is less than 45º C 4. Reduce the load to reduce the heating effect 5. After the cause of overheating is removed and the unit cools down, it will reset automatically.
Red LED constantly flashing	The loads is 200% higher than rated power.	1. Disconnect the load 2. Reduce the load 3. Cool the unit.

7. Specifications:

- Rated Power: 600W or 1500W dependent on model.
- Surge Power: Up to 150% Rated power for 10s, Up to 200% Rated power for 2s
- AC Voltage: 230V/240Vac
- AC output regulation: 10%
- AC output frequency: 50Hz±1%
- AC output waveform: Pure Sine Wave(THD<3%) at rated input voltage
- AC Output protection: AC short circuit, Overload, Over temperature
- Battery Voltage Range: 10.5V-16V
- Input Protection: Battery Low Alarm, Battery Low Shutdown, Battery Polarity, Reverse protection via fuse
- Efficiency: More than 85%
- Battery Types: Open & sealed battery
- Dimension(L*W*H)cm: 21*15*7 (600W), 29*22*9 (1500W)
- AC Output Socket: UK 3 pin socket.
- Cooling: Temperature and Load Controlled
- Operating Temperature: -15 ° C to 40° C
- Storage Temperature: -40 to 85°C
- Relative Humidity: 20% ~ 90% RH non-condensing

Note: *The specifications are subject to change without prior notice for further improvement of products.

8. Maintenance

To keep your inverter operating properly, there is very little maintenance required.
You should clean the exterior periodically with a dry cloth to prevent accumulation of dust and dirt. At the same time, tighten the screws on the DC input terminals.

9. Warranty

We guarantee this product against defects in materials and workmanship for a period of 12 months from the date of retail purchase by end user.
This warranty will be considered void if the unit has been misused, altered, or accidentally damaged. We are not liable for anything that occurs as a result of the user's fault.
If the warranty period for your product has expired or the unit was damaged by misuse or incorrect installation or if other conditions of the warranty have not been met, or if no dated proof of purchase is available then Costs to repair your unit may applicable.

10. Recommendations

For correct operation, the battery voltage should be between 10.8V and 15V and must be able to supply sufficient current to your inverter. The following table displays the recommended things (battery cable, Fuse, Battery Capacity) for each model of inverter:

Inverter type	Input Voltage	DC Battery Cable	Fuse	Battery Capacity
600W	12V	6mm² (1*Red/1*Black)	35A*4	≥100Ah
1500W	12V	10mm² (2*Red/2*Black)	35A*6	≥250Ah

11. Technical Support

If you have any questions or experience any problems with your inverter please contact us by telephone on 01928 759 239 or by email at contact@falcontechnical.co.uk

Ask Grandad

It's all a learning experience



Ask Grandad on 01928 759239

or visit www.falcontechnology.co.uk/askgrandad